REVISION HISTORY			
REV.	DESCRIPTION	DATE	DRAWN BY
1	ORIGINAL PRINT	4/10/2025	E. SCIME
2	UPDATED THICKNESS	5/8/2025	E. SCIME
3	ADDED BUMPOUT GEOMETRY	5/8/2025	E. SCIME

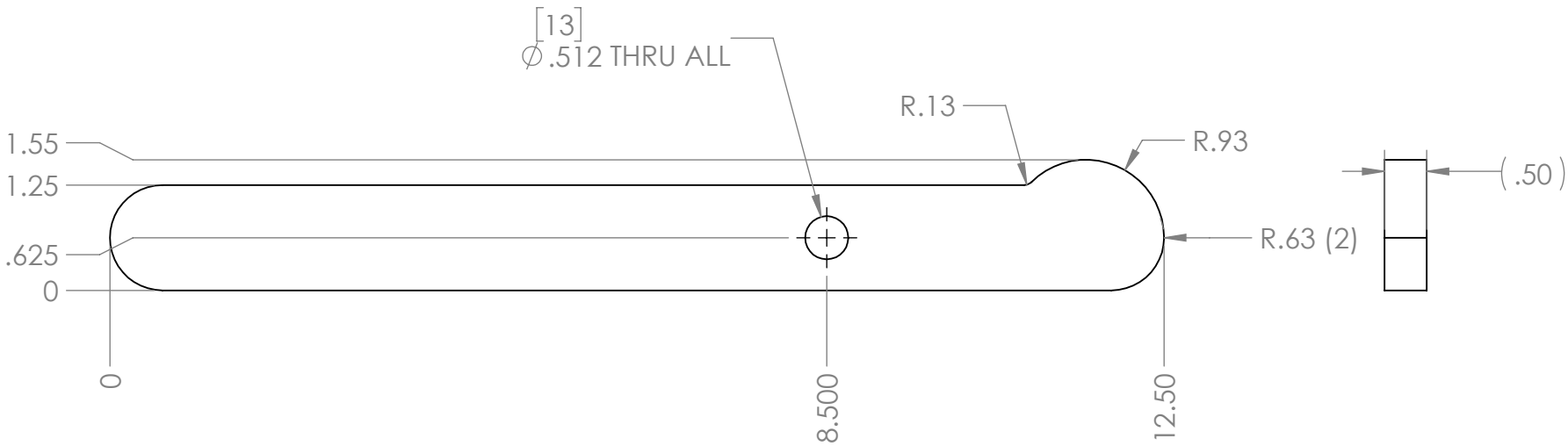

*** SEE CAD FOR ADDITIONAL TOOLPATH INFO***

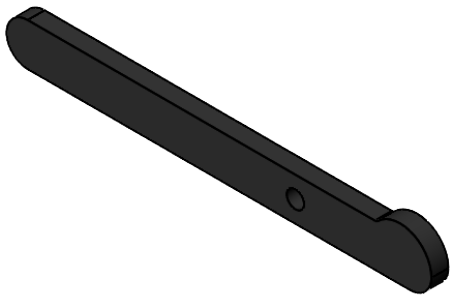

UNLESS OTHERWISE SPECIFIED:	COMMENTS:
DIMENSIONS ARE IN INCHES	DUAL DIMENSIONS ARE IN MILLIMETERS.
TOLERANCES: FRACTIONAL ±1/16 ANGULAR: MACH ±1° ANGULAR: BEND ±5° ONE PLACE DECIMAL ±0.1 TWO PLACE DECIMAL ±0.01 THREE PLACE DECIMAL ±0.005 FOUR PLACE DECIMAL ±0.0005	BREAK ALL SHARP EDGES.
MATERIAL rm-0090 BLACK ORANGE PEEL HDPE	
FINISH DEBURRED	
DO NOT SCALE DRAWING	

	NAME	DATE
CHECKED	PY	5/12/25
ENG APPR.		
MFG APPR.		
Q.A.		

AndyMark

TITLE:

GATE

SIZE	DWG. NO.	REV
A	am-5728	3

SCALE: 1:2 | SHEET 1 OF 1

5 4 3 2 1